DETAIL BELT SANDER

Author: Allen Lian
Editor:

Date Created: May 25th, 2022
Date Edited:

Version 1.0

Abstract

This SOP discusses the basic operations and functions of a detail belt sander. A detail belt sander is a hand-held power tool that drives a sanding belt at high speeds in order to sand surfaces, remove material, and shape wood.

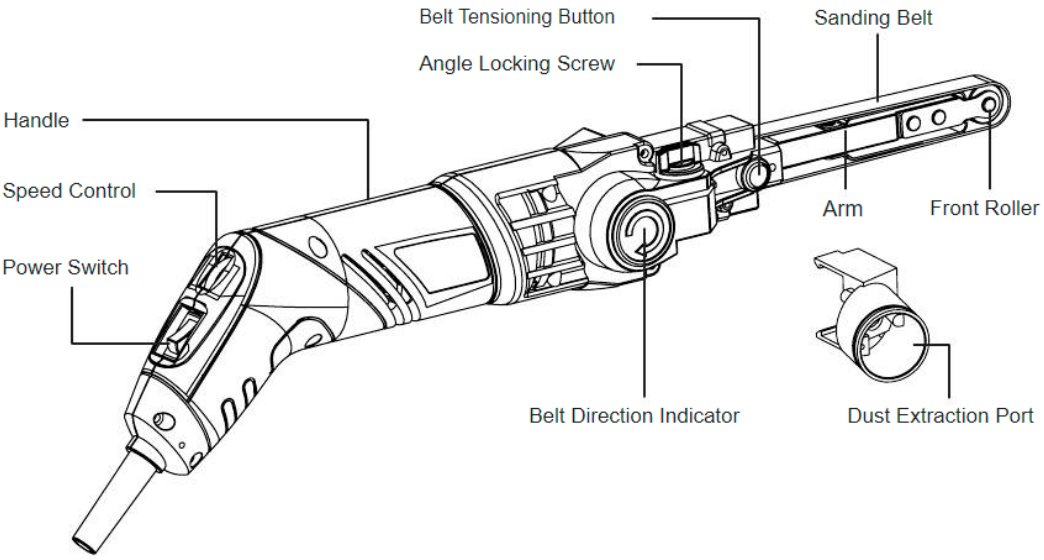

Figure 1: Detail belt sander parts and controls.

Contents

1 Choosing Belts and Their Purposes 3
2 Procedure 3
3 Replacing the Sanding Belt 3
4 Adjusting Angle 4
5 Dust Extraction 4
6 References 4

List of Figures

Figure 1 Detail belt sander parts 1
Figure 2 Dust extraction port 4

List of Tables

Table 1 Sandpaper grit selection 3

1 Choosing Belts and Their Purposes

Generally, belt sanders are used in the beginning stages of the sanding process or for the rapid removal of material. They work most effectively on wood. The detail belt sander at the lab is the WEN 6307 Belt Sander.

Table 1: Sandpaper grit selection and typical uses.

Sandpaper	Grit	Uses
Very coarse	60 or lower	Rough work, removing hard or thick layers of paint, shaping or removing large amounts of material.
Coarse	60–80	Removing any paint, smoothing rough surfaces such as unplaned wood.
Medium	120–150	Smoothing planed wood.
Fine	180–220	Sanding between coats of paint.
Very fine	240 or higher	Final details and finishing touches.

2 Procedure

1. Make sure the workspace is clear of any obstacles, the object to be sanded is properly positioned, secured, and dry. Ensure that there is nothing in the way that could damage the sanding belt.
2. Ensure that the power switch is off before plugging in the device. Place the power cord in such a way that it will not get damaged or caught in the belt.
3. Use both hands to operate the device. Start by turning on the power switch and allowing the sander to reach full speed before any use.
4. Adjust the sanding belt speed with the control wheel to the desired speed.
5. Gently bring the belt into contact with the surface. When at high speeds, the tool may snap forward upon first contact with the surface. Resist the forward motion and always ensure steady and slow movement across the surface.
6. When done, turn off the power switch and reset the speed back to 1.

3 Replacing the Sanding Belt

1. To remove the current belt, find a hard surface and push the front roller of the sanding belt against the surface. This will retract the roller and loosen the belt.
2. Take the belt off and find a different grit that suits the project.
3. Before re-inserting the next belt, check that the direction of the arrow on the inside of the sanding belt faces the same direction as the arrow indicated on the tool.
4. Insert the belt onto both rollers and manually move the belt to check for any problems.
5. Press the belt tensioning lever to tension the new belt.

4 Adjusting Angle

1. Loosen the orange angle-locking screw on the right side of the belt by turning it counterclockwise.
2. Adjust the angle of the belt sander to fit the project.
3. Tighten the orange angle-locking screw to lock the arm back in place.

5 Dust Extraction

1. If you are working on a project with a lot of sawdust, the dust extractor is recommended.
2. Match the groove on the dust extractor port with the port on the sander and attach the port. Check that it is securely attached.
3. Connect a dust extractor hose or a dust bag with an inner diameter of 1-1/4 inches (32 mm) to the dust extractor port.

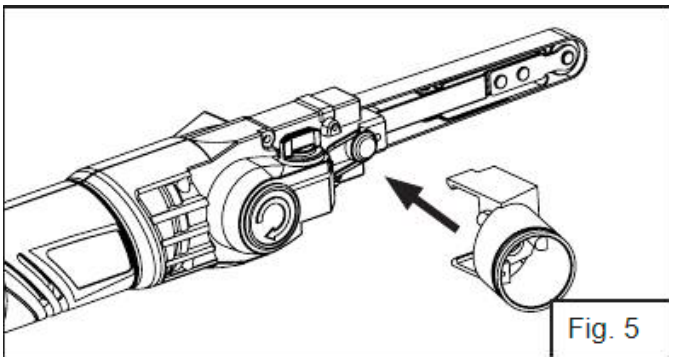

Figure 2: Dust extraction port attachment.

6 References

[1] https://www.manualslib.com/manual/1719278/Wen-6307.html#manual

[2] https://www.eng.uwo.ca/files/departments-units/student-shop/2018/sop-sander-disc-and-belt-sander.pdf

[3] https://www.empireabrasives.com/blog/choosing-the-right-sanding-belt/